ROUND CONICAL POLES



ROUND CONICAL POLES

Round Conical Poles, distinguished by their sleek and tapered design, exemplify a pinnacle of engineering precision in the world of infrastructure solutions. At Atom Poles, these poles undergo a meticulous manufacturing process, beginning with the careful selection of high-grade hot-rolled steel coils to establish a foundation of durability and resilience.

The automated production procedure involves a sophisticated interplay of cutting and folding or pressing the trapezoidal sheet into the elegant conical shape that characterizes these poles. This process, executed with precision, not only ensures uniformity but also guarantees structural integrity, allowing Round Conical Poles to seamlessly integrate into a variety of infrastructure applications.

A key feature of our production methodology is the application of longitudinal welding through the submerged arc welding technique. This process welds the sides of the conical shape seamlessly, enhancing the overall structural stability and longevity of the poles. The use of submerged arc welding ensures a robust and enduring connection, capable of withstanding environmental stresses and contributing to the reliability of the infrastructure.

Atom Poles takes pride in delivering Round Conical Poles that not only meet but exceed industry standards. These poles find versatile applications, ranging from highway and street lighting to traffic signage, electrical distribution, and transmission towers. Additionally, they serve in wireless communication towers, high mast and sport lighting poles, transit poles, solar lighting, and wind tower poles.

Our commitment extends beyond mere functionality. Atom Poles offers a diverse range of Round Conical Poles that not only fulfil practical purposes but also contribute to the aesthetic appeal of urban landscapes. Whether it's the precision in design or the durability in construction, our Round Conical Poles embody the fusion of engineering excellence and a steadfast commitment to quality that defines Atom Poles in the realm of infrastructure solutions.

ROUND CONICAL POLES

CONICAL LIGHT POLE PRESS BRAKE TOOL SPECIFICATION

tool length 16 m ; taper rate: 11 ／ 1000 ; small end OD: 60 mm ; Big end OD: 236 mm ; bascial thickness: 3-4 mm
It can do the following size CONICAL CIRCULAR light pole.
Light pole length,small end outer diameter,big end outer diameter table

small end OD (mm)	60	70	80	90	100	110	120	130	140	150	160	170	180	190	200	210
pole length (m)	Big end outer diameter table (mm)															
2	82	92	102	112	122	132	142	152	162	172	182	192	202	212	222	232
3	93	03	113	123	133	143	153	163	173	183	193	203	213	223	233	
4	104	114	124	134	144	154	164	174	184	194	204	214	224	234		
5	115	125	135	145	155	165	175	185	195	205	215	225	235			
6	126	136	146	156	166	176	186	196	206	216	226	236				
7	137	147	147	167	177	187	197	207	217	227						
8	148	158	168	178	188	198	208	218	228							
9	159	169	179	189	199	299	219	229								
10	170	180	190	200	210	220	230									
11	181	191	201	211	221	231										
12	192	202	212	222	232											

tool length 16 m ; taper rate: 13 ／ 1000 ; small end OD: 60 mm ; Big end OD: 268 mm ; bascial thickness: 3-4 mm
It can do the following size CONICAL CIRCULAR light pole.
Light pole length,small end outer diameter,big end outer diameter table

small end OD (mm)	60	70	80	90	100	110	120	130	140	150	160	170	180	190	200	210
pole length (m)	Big end outer diameter table (mm)															
2	86	96	106	116	126	136	146	156	166	176	186	196	206	216	226	236
3	99	109	119	129	139	149	159	169	179	189	199	209	219	229	239	249
4	112	122	132	142	152	162	172	182	192	202	212	222	232	242	252	262
5	125	135	145	155	165	175	185	195	205	215	225	235	245	255	265	
6	138	148	158	168	178	188	198	208	218	228	238	248	258	268		
7	151	161	171	181	191	201	211	221	231	241	251	261				
8	164	174	184	194	204	214	224	234	244	254	264					
9	177	187	197	207	217	227	237	247	257	267						
10	190	200	210	220	230	240	250	260								
11	203	213	223	233	243	253	263									
12	216	226	236	246	256	266										

ROUND CONICAL POLES

ROUND CONICAL STREET LIGHTING POLES WITH LONG BRACKET

Arm Size (mm)			
"h1"	"L"	"R"	"ØD x t"
1,000	1,000	700	60.3 x 2.90
1,000	1,500	700	60.3 x 2.90
1,000	1,500	700	60.3 x 2.90
2,000	2,000	1,000	60.3 x 3.65
2,000	2,500	1,500	60.3 x 3.65
2,000	2,500	1,500	60.3 x 3.65

Door Opening (mm)		
"A"	"B"	"C"
600	400	100
600	400	100
600	400	100
600	400	100
600	500	120
600	500	120

Pole + Bracket Details

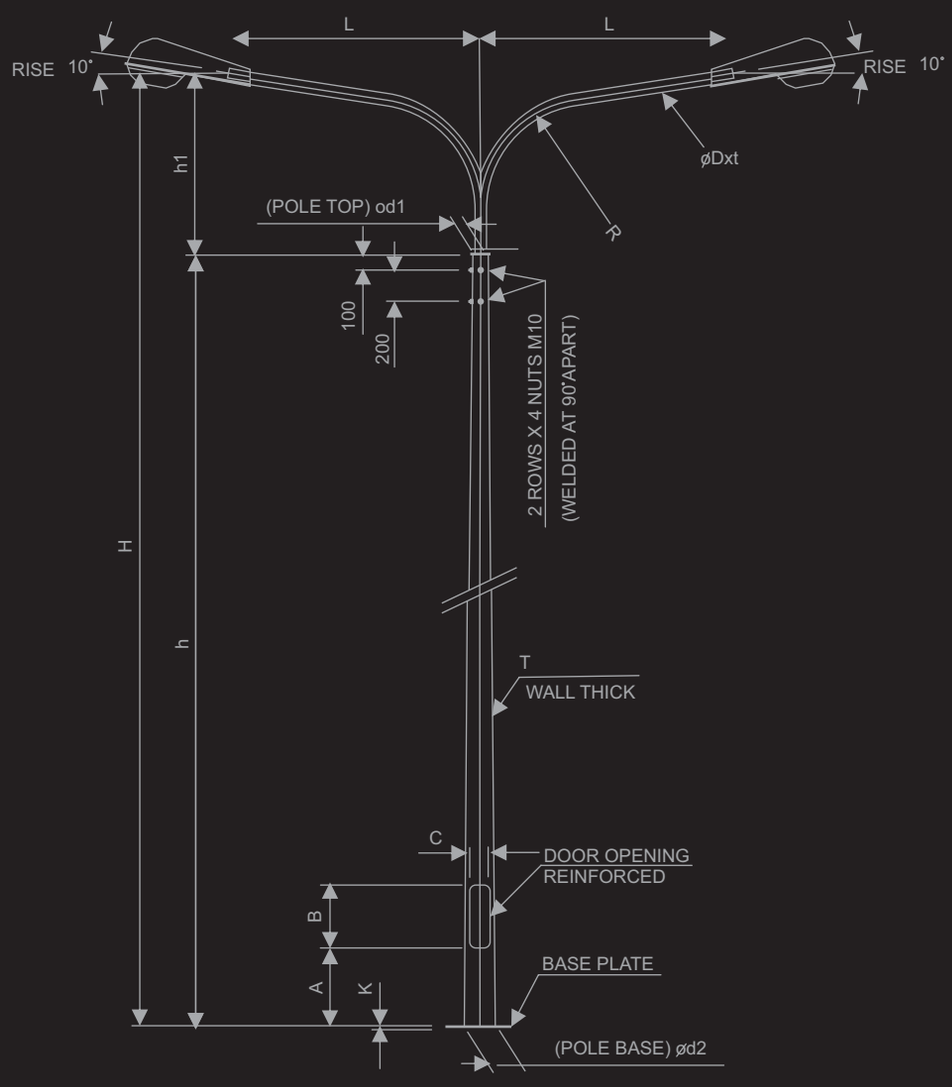

Door Opening Details

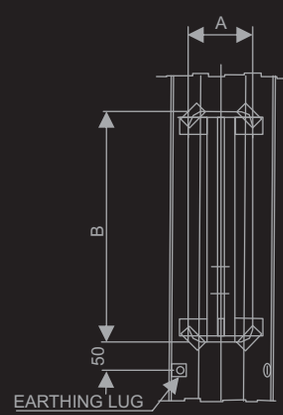

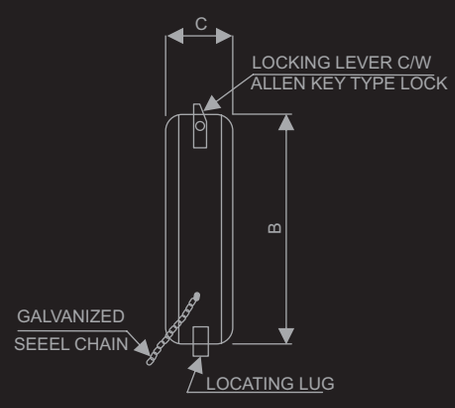

ROUND CONICAL POLES

ROUND CONICAL STREET LIGHTING POLES WITH LONG BRACKET

Flange/Base Plate Size (mm)

"D"	"E"	"F"	"G"	"K"
400	300	22	35	10
400	300	28	45	15
400	300	28	45	15
400	300	28	45	15
400	300	32	50	20
400	350	32	50	20

Anchor Bolts Size (mm)

"ØPxQ"	"R"	"M"	"Qty"
18x400	50	100	4 Nos
24x500	50	100	4 Nos
24x500	50	100	4 Nos
24x500	50	100	4 Nos
27x700	50	100	4 Nos
27x700	75	100	4 Nos

Abbreviations/Notes

Abbreviations :

Arm Size:
h 1 = Bracket height,
L = Outreach
R = Radius
Dxt = Diameter x thickness.

Door Opening:
A= Door opening ht above ground
B = Door size
C = Door width.

Flange/Base Plate :
D = Dimension
E = Dist. between holes
F = Hole width
G = Hole length
K = Plate Thickness.

Anchor Bolts :
P = Bolt dia
Q = Bolt height
R = Radius
N = Bending height
Q = No. of bolts required/Pole.

Notes:

1. All dimensions are in mm
2. Design compliance with EN 40:2000 Loads BS CP3, Chapter 5, Part-2
3. Maximum wind speed 160 Km/Hr.
4. Finish: Hot dip galvanized to BS ISO1461 (or as specified).
5. Accessories are made of Mild Steel Grade
6. Shaft made of Steel Grade FE 510C (According to EN 10025).

Flange Plate Details

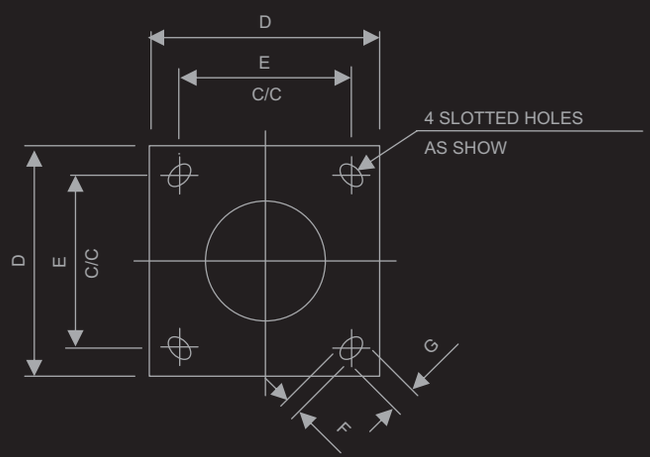

Anchor Bolt Details

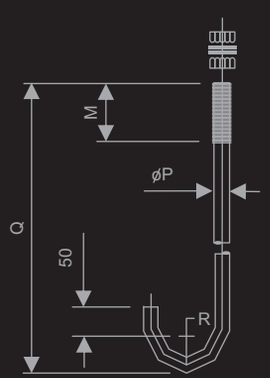

ROUND CONICAL POLES

ROUND CONICAL STREET LIGHTING POLES WITH LONG BRACKET

Arm Size (mm)		
"h1"	"L"	"ØD x t"
190	500	60.3 x 2.90
225	700	60.3 x 2.90
275	1,000	60.3 x 2.90
375	1,500	60.3 x 3.65

Door Opening (mm)		
"A"	"B"	"C"
600	400	100
600	400	100
600	400	100
600	400	110

Pole + Bracket Details

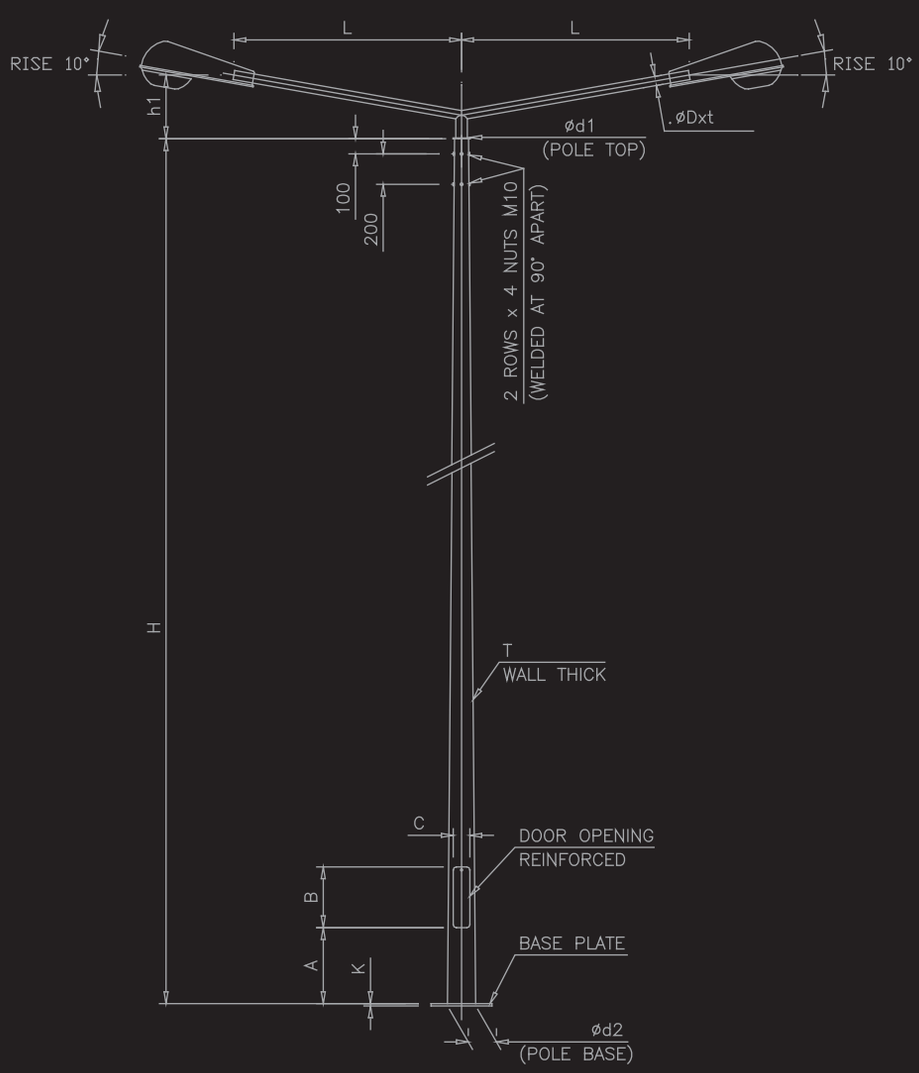

Door Opening Details

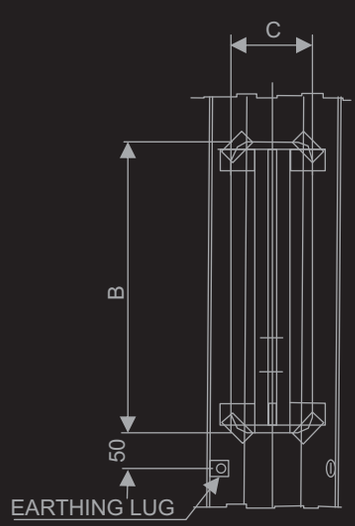

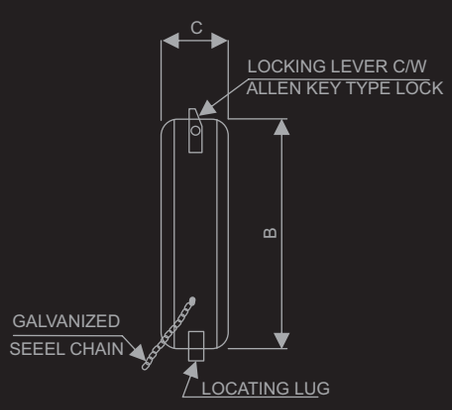

ROUND CONICAL POLES

ROUND CONICAL STREET LIGHTING POLES WITH LONG BRACKET

Flange/Base Plate Size (mm)

"D"	"E"	"F"	"G"	"K"
400	300	22	35	10
400	300	28	45	15
400	300	28	45	15
400	300	28	45	15

Anchor Bolts Size (mm)

"ØPxQ"	"R"	"M"	"Qty"
18x400	50	100	4 Nos
24x500	50	100	4 Nos
24x500	50	100	4 Nos
24x500	50	100	4 Nos

Flange Plate Details

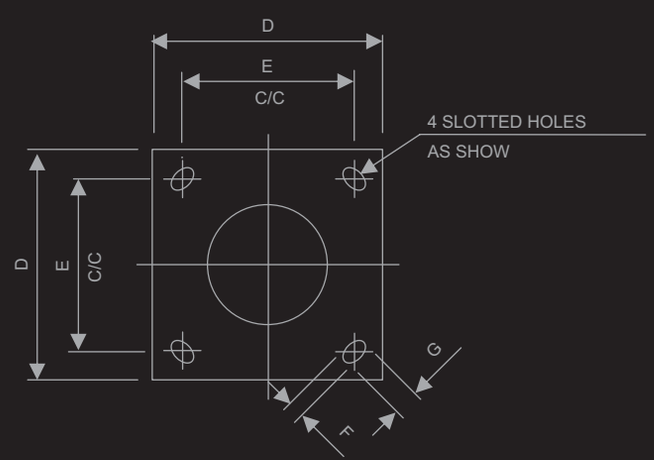

Anchor Bolt Details

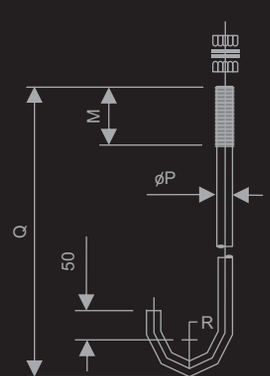

Abbreviations/Notes

Abbreviations :

Arm Size:
h 1 = Bracket height,
L = Outreach
Dxt = Diameter x thickness.

Door Opening:
A= Door opening ht above ground
B = Door size
C = Door width.

Flange/Base Plate :
D = Dimension
E = Dist. between holes
F = Hole width
G = Hole length
K = Plate Thickness.

Anchor Bolts :
P = Bolt dia
Q = Bolt height
R = Radius
N = Bending height
Q = No. of bolts required/Pole.

Notes:

1. All dimensions are in mm
2. Design compliance with EN 40:2000 Loads BS CP3, Chapter 5, Part-2
3. Maximum wind speed 160 Km/Hr.
4. Finish: Hot dip galvanized to BS ISO1461 (or as specified).
5. Accessories are made of Mild Steel Grade
6. Shaft made of Steel Grade FE 510C (According to EN 10025).

ROUND CONICAL POLES

ROUND CONICAL STREET LIGHTING POLES WITH SHORT BRACKET

Arm Size (mm)

"h1"	"L"	"OD xt"
200	500	60.3 x 3.00
200	500	60.3 x 3.00
200	500	60.3 x 3.00
200	500	60.3 x 3.00
200	500	60.3 x 3.00

Door Opening (mm)

"A"	"B"	"C"
600	500	120
600	500	120
600	500	140
600	500	140
600	500	140

Pole + Bracket Details

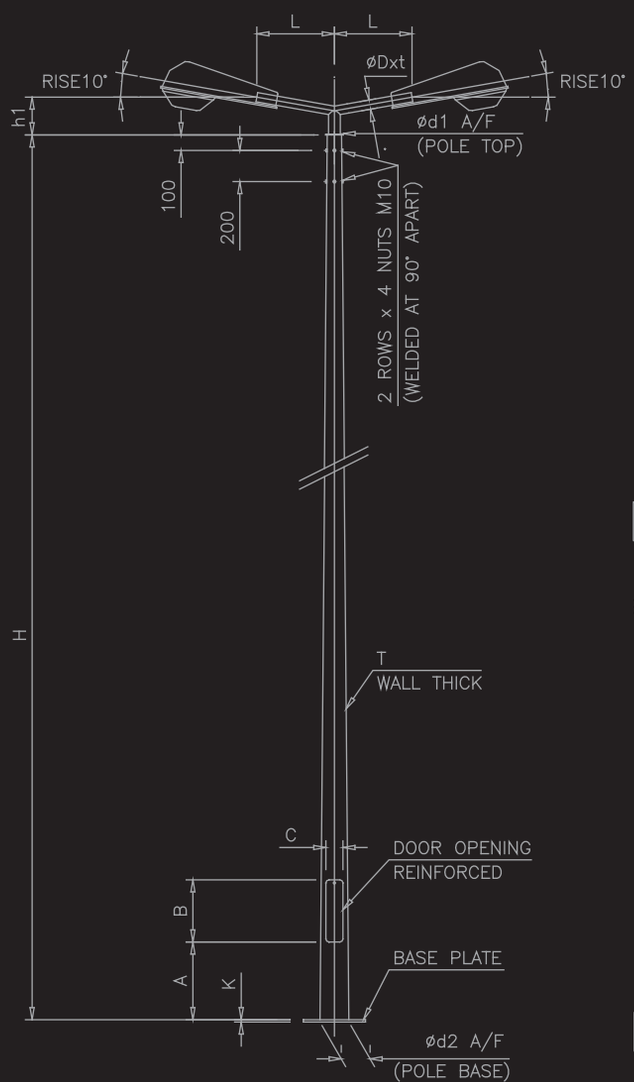

4-Way Bracket Details

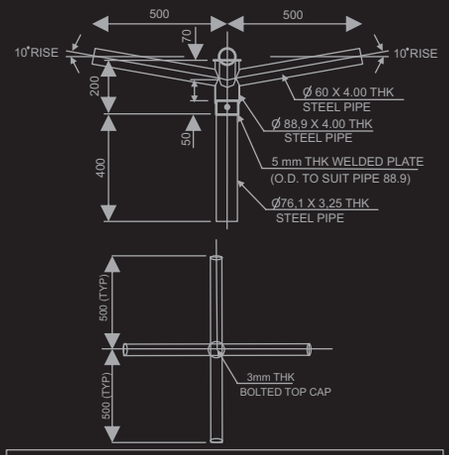

6-Way Bracket Details

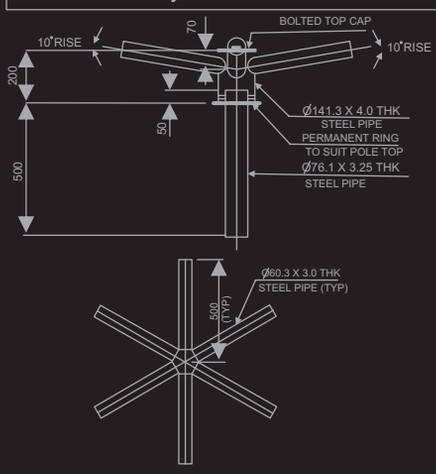

Door Opening Details

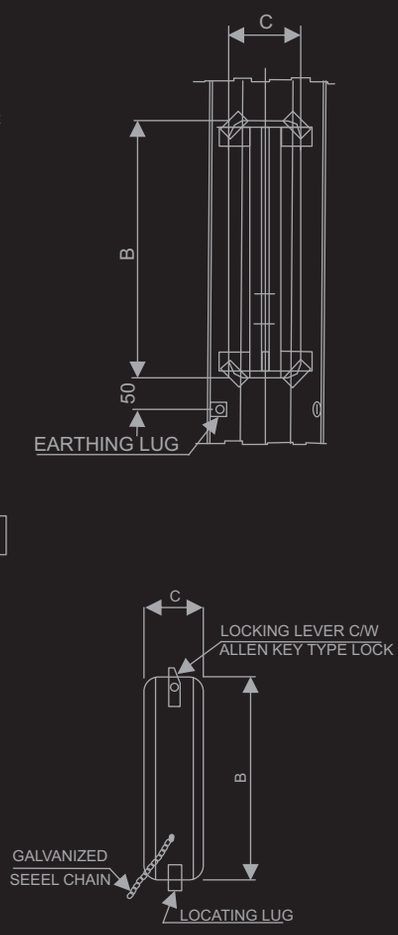

ROUND CONICAL POLES

ROUND CONICAL STREET LIGHTING POLES WITH SHORT BRACKET

Flange/Base Plate Size (mm)				
"D"	"E"	"F"	"G"	"K"
400	300	32	45	20
400	300	32	50	25
450	350	35	50	25
450	350	35	50	30
500	400	38	50	35

Anchor Bolts Size (mm)			
"OPxQ"	"R"	"R"	"Qty"
27x700	75	120	4 Nos
27x900	75	150	4 Nos
30x1000	75	150	4 Nos
30x1000	75	150	4 Nos
32x1000	75	150	4 Nos

Flange Plate Details

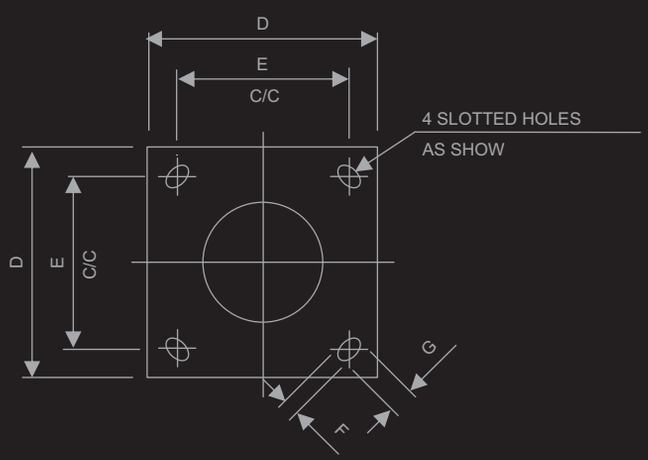

Anchor Bolt Details

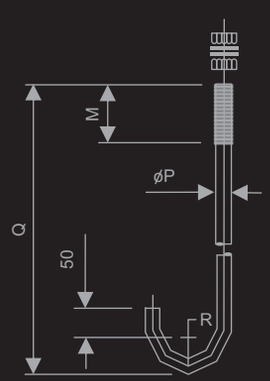

Abbreviations/Notes

Abbreviations :

Arm Size:
h 1 = Bracket height,
L = Outreach
Dxt = Diameter x thickness.

Door Opening:
A= Door opening ht above ground
B = Door size
C = Door width.

Flange/Base Plate :
D = Dimension
E = Dist. between holes
F = Hole width
G = Hole length
K = Plate Thickness.

Anchor Bolts :
P = Bolt dia
Q = Bolt height
R = Radius
N = Bending height
Q = No. of bolts required/Pole.

Notes:

1. All dimensions are in mm
2. Design compliance with EN 40:2000 Loads BS CP3, Chapter 5, Part-2
3. Maximum wind speed 160 Km/Hr.
4. Finish: Hot dip galvanized to BS ISO1461 (or as specified).
5. Accessories are made of Mild Steel Grade
6. Shaft made of Steel Grade FE 510C (According to EN 10025).