OCTAGONAL POLES



OCTAGONAL POLES

Octagonal Poles, a hallmark of structural excellence, are meticulously crafted through a sophisticated manufacturing process at Atom Poles. Our commitment to quality begins with the careful selection of high-grade hot-rolled steel coils, ensuring the foundation of durability and strength for each pole.

The production journey unfolds with an automated procedure that intricately cuts and folds or presses the trapezoidal sheet into the iconic octagonal shape. This precision is not only a testament to our dedication to detail but also a guarantee of uniformity and structural integrity. The octagonal configuration is achieved with a keen focus on maintaining dimensional accuracy, allowing these poles to seamlessly integrate into diverse infrastructure applications.

What sets our Octagonal Poles apart is the longitudinal welding technique employed during production. Through submerged arc welding, the sides are seamlessly bonded, further enhancing the structural stability and longevity of the poles. This welding method ensures a robust connection that withstands environmental stresses and contributes to the overall reliability of the infrastructure.

As a result, Atom Poles proudly delivers Octagonal Poles that not only meet but exceed industry standards. From highway and street lighting to traffic signage, electrical distribution, and transmission towers, our octagonal poles stand as a symbol of innovation and excellence in the realm of infrastructure products. Additionally, their adaptability extends to applications such as wireless communication towers, high mast and sport lighting poles, transit poles and wind tower poles.

In our pursuit of excellence, we go beyond functionality. Atom Poles offers a diverse range of Octagonal Poles that not only serve practical purposes but also contribute to the visual aesthetics of urban landscapes. Whether it's the precision in design or the robustness in construction, our Octagonal Poles exemplify the intersection of engineering prowess and a commitment to quality that defines Atom Poles in the realm of infrastructure solutions.

OCTAGONAL POLES

OCTAGON STREET LIGHTING POLES WITH LONG BRACKET

Pole Size (mm)				
"H"	"h"	"d1"	"d2"	"Thk"
6,000	5,000	75	130	4
8,000	7,000	75	156	4
9,000	8,000	75	156	4
10,000	8,000	75	180	4
12,000	10,000	90	250	4
14,000	12,000	90	285	4

Arm Size (mm)			
"h1"	"L"	"R"	"ØD x t"
1,000	1,000	700	60.3 x 2.90
1,000	1,500	700	60.3 x 2.90
1,000	1,500	700	60.3 x 2.90
2,000	2,000	1,000	60.3 x 3.65
2,000	2,500	1,500	60.3 x 3.65
2,000	2,500	1,500	60.3 x 3.65

Door Opening (mm)		
"A"	"B"	"C"
600	400	100
600	400	100
600	400	100
600	400	100
600	500	120
600	500	120

Pole + Bracket Details

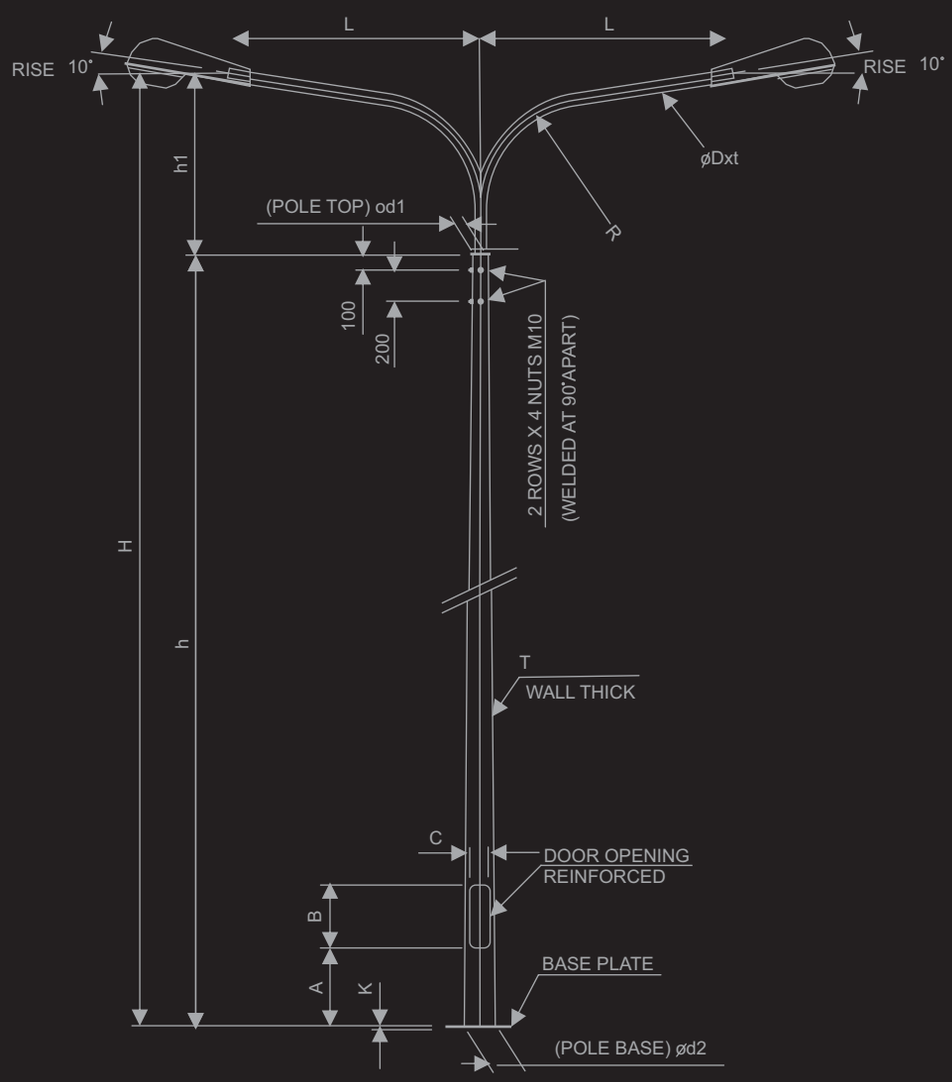

Door Opening Details

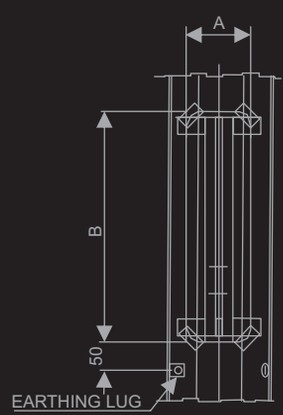

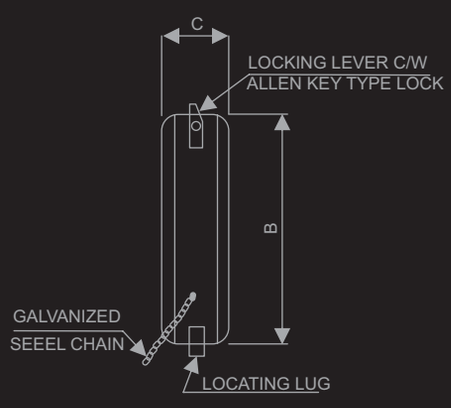

OCTAGONAL POLES

OCTAGON STREET LIGHTING POLES WITH LONG BRACKET

Flange/Base Plate Size (mm)

"D"	"E"	"F"	"G"	"K"
400	300	22	35	10
400	300	28	45	15
400	300	28	45	15
400	300	28	45	15
400	300	32	50	20
400	350	32	50	20

Anchor Bolts Size (mm)

"ØPxQ"	"R"	"M"	"Qty"
18x400	50	100	4 Nos
24x500	50	100	4 Nos
24x500	50	100	4 Nos
24x500	50	100	4 Nos
27x700	50	100	4 Nos
27x700	75	100	4 Nos

Abbreviations/Notes

Abbreviations :

Pole Size :
H = Overall height
h = Shaft height
dl = Top dia.
d2 = Bottom dia.
Thk = ShaftWallThickness

Arm Size:
h 1 = Bracket height,
L = Outreach
R = Radius
Dxt = Diameter x thickness.

Door Opening:
A= Door opening ht above ground
B = Door size
C = Door width.

Flange/Base Plate :
D = Dimension
E = Dist. between holes
F = Hole width
G = Hole length
K = Plate Thickness.

Anchor Bolts :
P = Bolt dia
Q = Bolt height
R = Radius
N = Bending height
Q = No. of bolts required/Pole.

Notes:

1. All dimensions are in mm
2. Design compliance with EN 40:2000 Loads BS CP3, Chapter 5, Part-2
3. Maximum wind speed 160 Km/Hr.
4. Finish: Hot dip galvanized to BS ISO1461 (or as specified).
5. Accessories are made of Mild Steel Grade
6. Shaft made of Steel Grade FE 510C (According to EN 10025).

Flange Plate Details

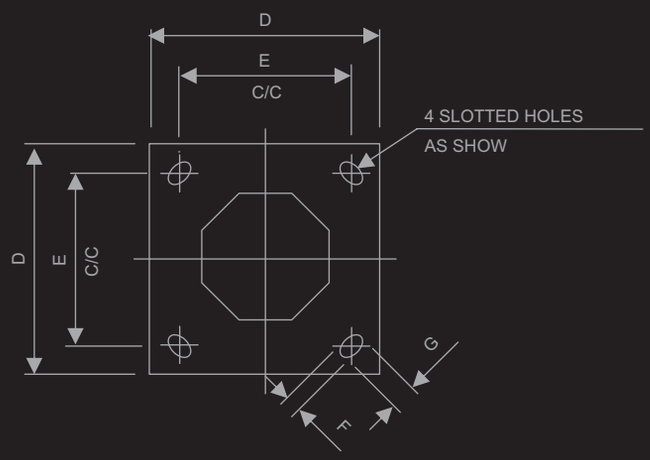

Anchor Bolt Details

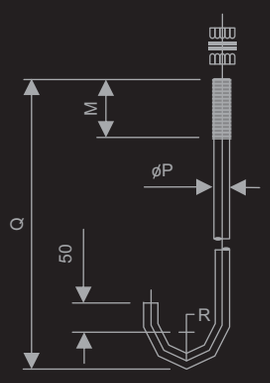

OCTAGONAL POLES

OCTAGON STREET LIGHTING POLES WITH LONG BRACKET

Pole Size (mm)			
"H"	"d1"	"d2"	"Thk"
6,000	60	130	4
8,000	60	150	4
9,000	75	165	4
10,000	75	180	4

Arm Size (mm)		
"h1"	"L"	"ØD x t"
190	500	60.3 x 2.90
225	700	60.3 x 2.90
275	1,000	60.3 x 2.90
375	1,500	60.3 x 3.65

Door Opening (mm)		
"A"	"B"	"C"
600	400	100
600	400	100
600	400	100
600	400	110

Pole + Bracket Details

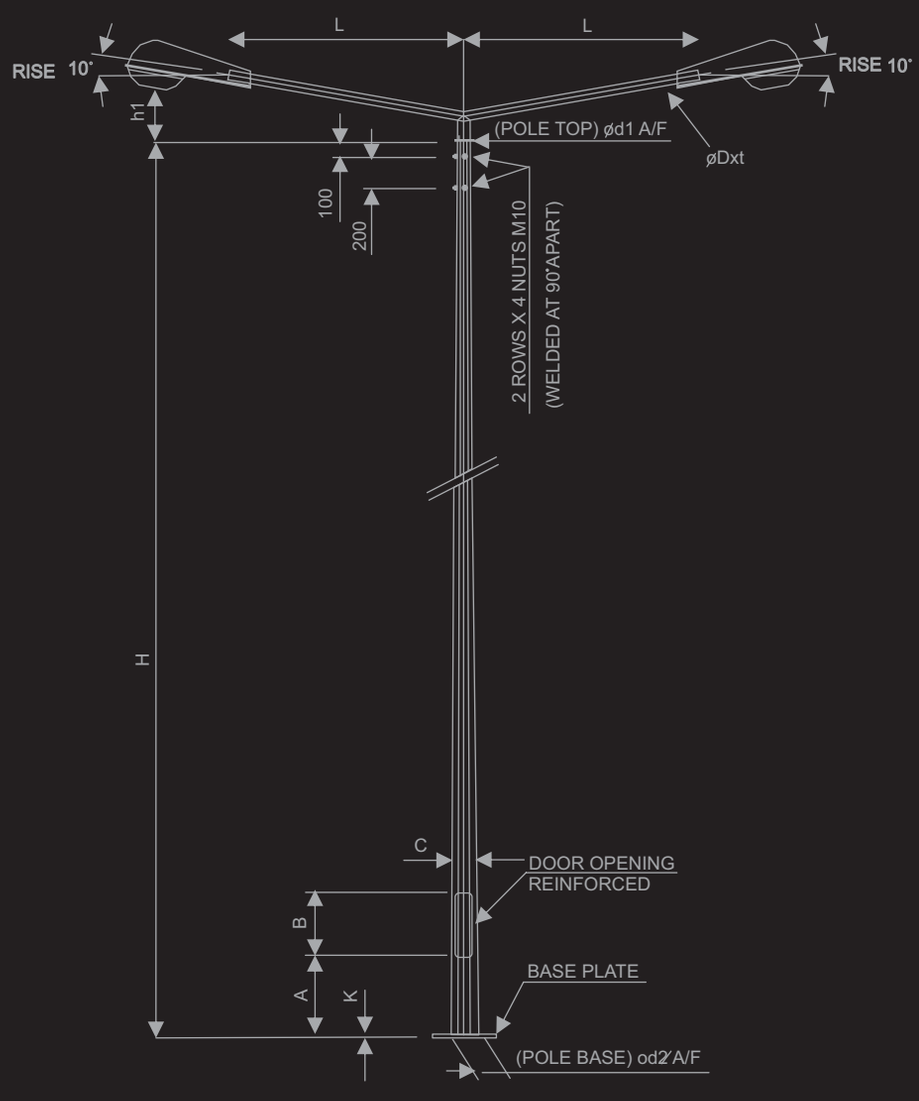

Door Opening Details

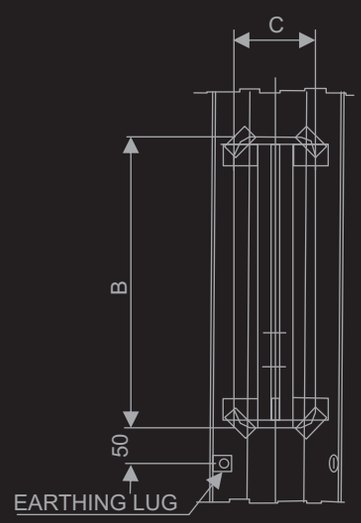

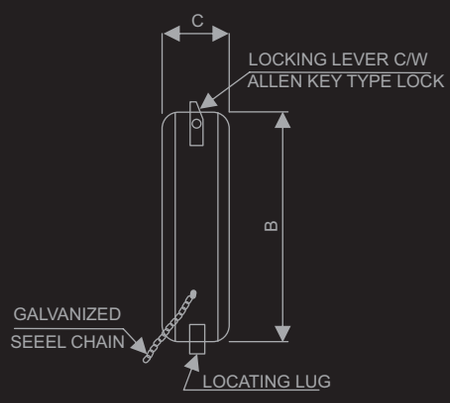

OCTAGONAL POLES

OCTAGON STREET LIGHTING POLES WITH LONG BRACKET

Flange/Base Plate Size (mm)

"D"	"E"	"F"	"G"	"K"
400	300	22	35	10
400	300	28	45	15
400	300	28	45	15
400	300	28	45	15

Anchor Bolts Size (mm)

"ØPxQ"	"R"	"M"	"Qty"
18x400	50	100	4 Nos
24x500	50	100	4 Nos
24x500	50	100	4 Nos
24x500	50	100	4 Nos

Flange Plate Details

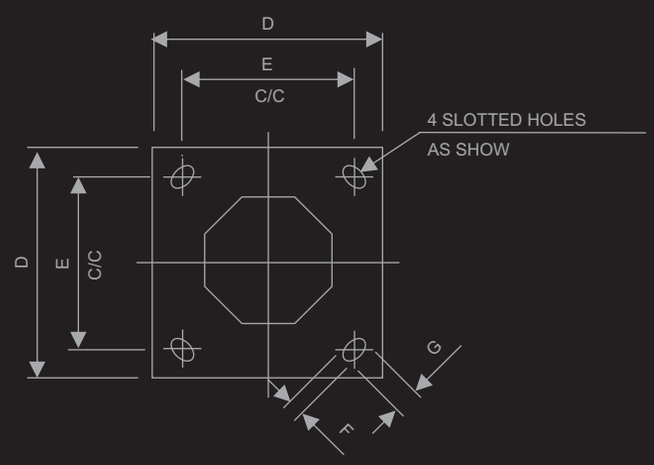

Anchor Bolt Details

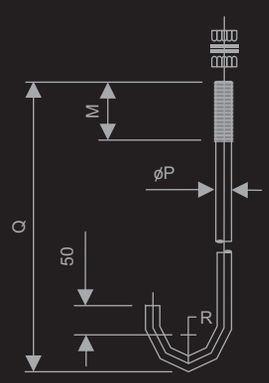

Abbreviations/Notes

Abbreviations :

I) Pole Size :
H = Shaft height
dl = Top dia.
d2 = Bottom dia.
Thk = ShaftWallThickness

(II) Arm Size:
h 1 = Bracket height,
L = Outreach
Dxt = Diameter x thickness.

(III) Door Opening:
A= Door opening ht above ground
B = Door size
C = Door width.

(IV) Flange/Base Plate :
D = Dimension
E = Dist. between holes
F = Hole width
G = Hole length
K = Plate Thickness.

(V) Anchor Bolts :
P = Bolt dia
Q = Bolt height
R = Radius
N = Bending height
Q = No. of bolts required/Pole.

Notes:

1. All dimensions are in mm
2. Design compliance with EN 40:2000 Loads BS CP3, Chapter 5, Part-2
3. Maximum wind speed 160 Km/Hr.
4. Finish: Hot dip galvanized to BS ISO1461 (or as specified).
5. Accessories are made of Mild Steel Grade
6. Shaft made of Steel Grade FE 510C (According to EN 10025).

OCTAGONAL POLES

OCTAGON STREET LIGHTING POLES WITH SHORT BRACKET

Pole Size (mm)

"H"	"d1"	"d2"	"T"	
12.000	90	250	4	—
14.000	90	285	4	—
15.000	105	300	5	4
16.000	105	320	5	4
18.000	105	375	5	4

Arm Size (mm)

"h1"	"L"	"OD xt"
200	500	60.3 x 3.00
200	500	60.3 x 3.00
200	500	60.3 x 3.00
200	500	60.3 x 3.00
200	500	60.3 x 3.00

Door Opening (mm)

"A"	"B"	"C"
600	500	120
600	500	120
600	500	140
600	500	140
600	500	140

Pole + Bracket Details

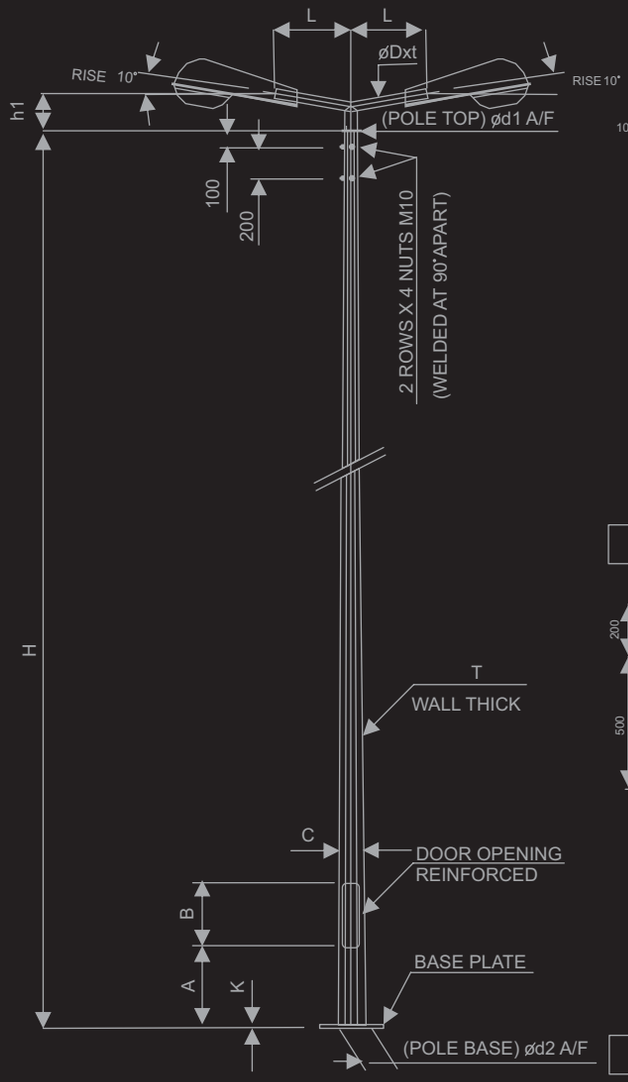

Door Opening Details

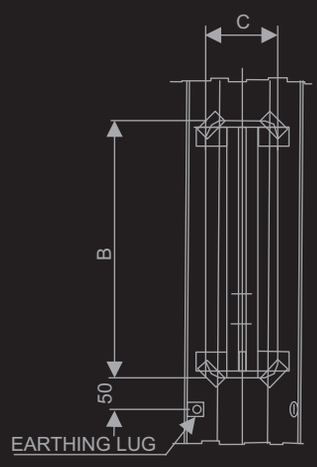

4-Way Bracket Details

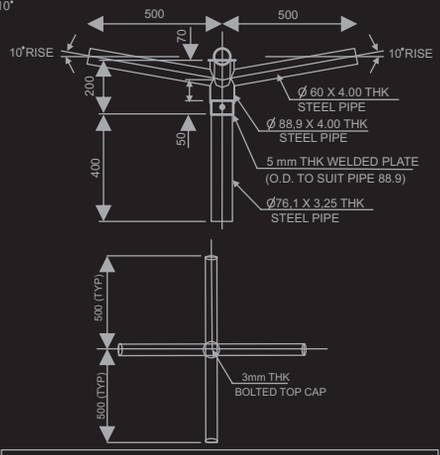

6-Way Bracket Details

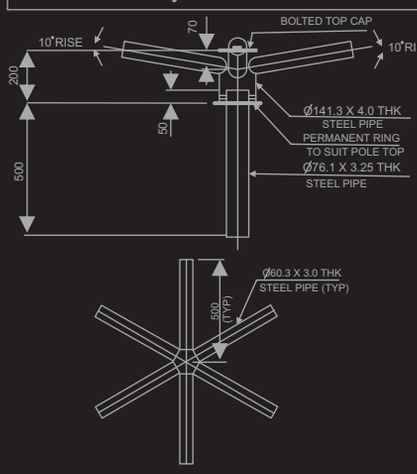

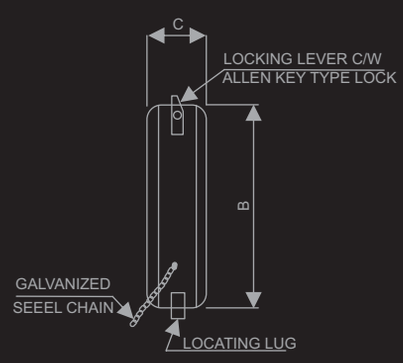

OCTAGONAL POLES

OCTAGON STREET LIGHTING POLES WITH SHORT BRACKET

Flange/Base Plate Size (mm)				
"D"	"E"	"F"	"G"	"K"
400	300	32	45	20
400	300	32	50	25
450	350	35	50	25
450	350	35	50	30
500	400	38	50	35

Anchor Bolts Size (mm)			
"OPxQ"	"R"	"R"	"Qty"
27x700	75	120	4 Nos
27x900	75	150	4 Nos
30x1000	75	150	4 Nos
30x1000	75	150	4 Nos
32x1000	75	150	4 Nos

Flange Plate Details

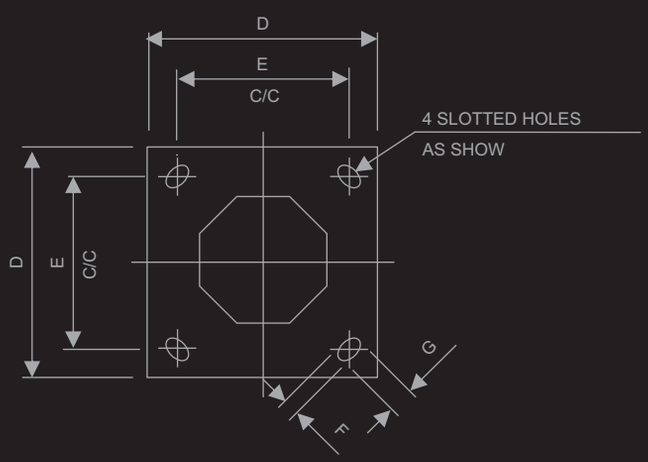

Anchor Bolt Details

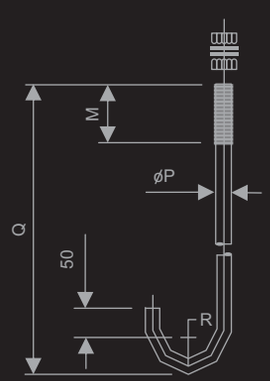

Abbreviations/Notes

Abbreviations :

Pole Size :
H = Shaft height
dl = Top dia.
d2 = Bottom dia.
Thk = ShaftWallThickness

Arm Size:
h 1 = Bracket height,
L = Outreach
Dxt = Diameter x thickness.

Door Opening:
A= Door opening ht above ground
B = Door size
C = Door width.

Flange/Base Plate :
D = Dimension
E = Dist. between holes
F = Hole width
G = Hole length
K = Plate Thickness.

Anchor Bolts :
P = Bolt dia
Q = Bolt height
R = Radius
N = Bending height
Q = No. of bolts required/Pole.

Notes:

1. All dimensions are in mm
2. Design compliance with EN 40:2000 Loads BS CP3, Chapter 5, Part-2
3. Maximum wind speed 160 Km/Hr.
4. Finish: Hot dip galvanized to BS ISO1461 (or as specified).
5. Accessories are made of Mild Steel Grade
6. Shaft made of Steel Grade FE 510C (According to EN 10025).